HBA #UL924BRLN1 & #UL924BRLN2

For Use with wiHUBB Smart Pack when transfer to separate Emergency Circuit is required during commercial power failure

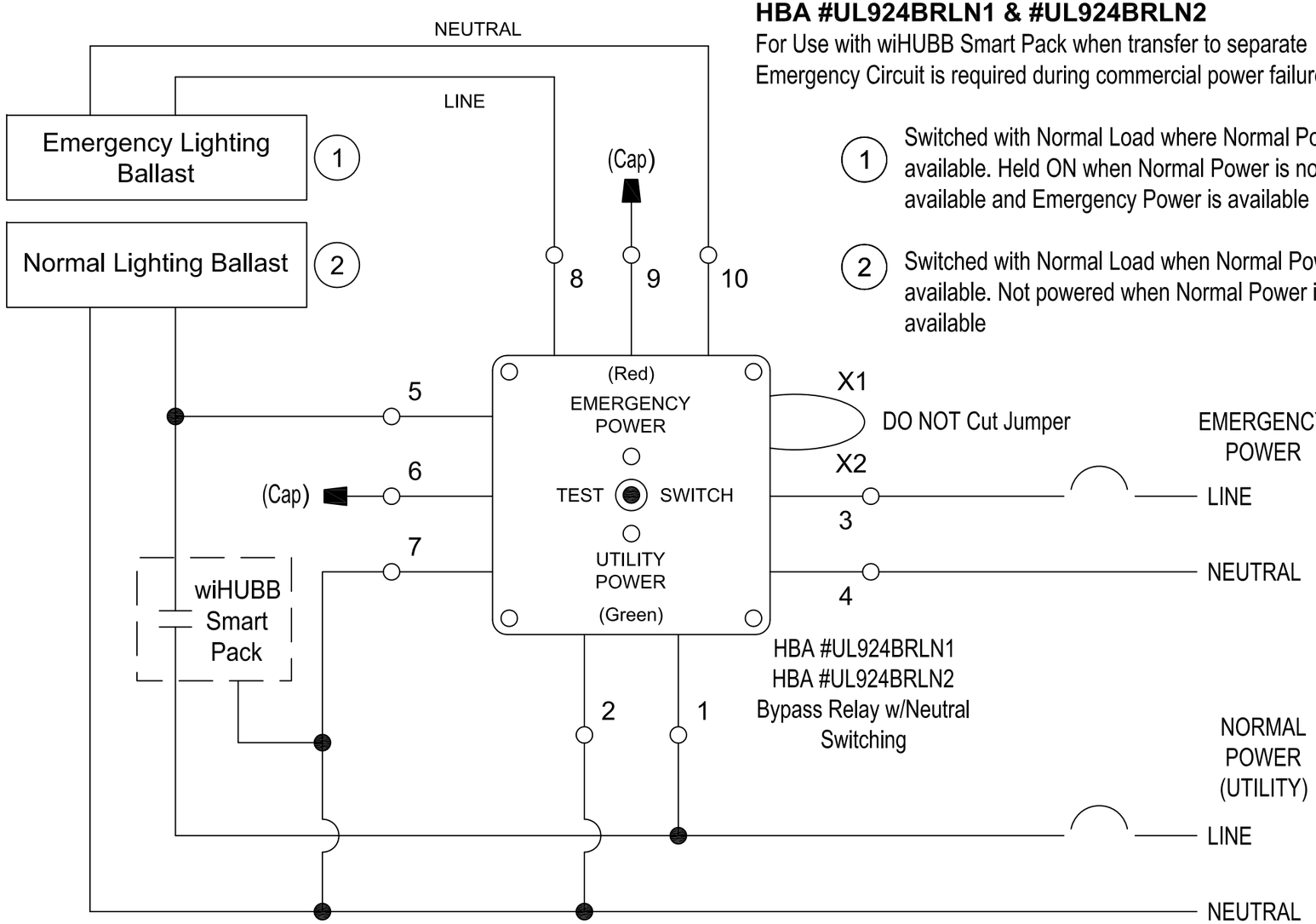

1 Switched with Normal Load where Normal Power is available. Held ON when Normal Power is not available and Emergency Power is available

2 Switched with Normal Load when Normal Power is available. Not powered when Normal Power is not available

REV	REVISION DESCRIPTION	DATE

wiHUBB SMART PACK WITH UL924BRLN1 OR UL924BRLN2

ADDRESS
STREET
CITY, STATE

#UL924BRLN1 & #UL924BRLN2

Hubbell Building Automation
(888) 698-3242
(512) 450-1100
9601 Dessau Rd. - Bldg 1
Austin, Tx 78745

THIS DOCUMENT AND SPECIFICATIONS DESCRIBED WITHIN ARE THE EXCLUSIVE PROPERTY OF HUBBELL BUILDING AUTOMATION ISSUED IN THE STRICTEST CONFIDENCE, AND SHALL NOT BE REPRODUCED, COPIED OR USED WITHOUT PRIOR WRITTEN PERMISSION.

STATUS			
DETAIL			
DRAWN	REVIEWED		DATE
AMJ	XXX		10-22-12

1